centre de
développement
pédagogique
pour la formation générale
en science et technologie

Working document

TECHNICAL FILE OF THE PERFORATED PANEL

This technical file is intended for technical or teaching personnel.

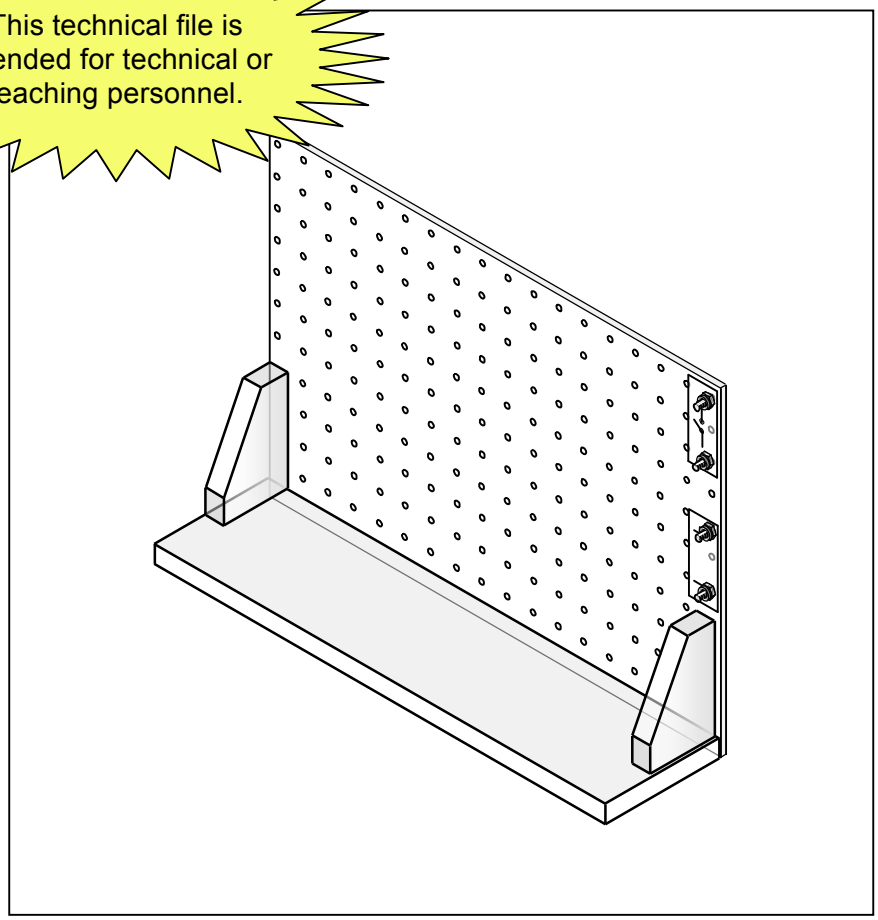

« FIND THE SOLUTION! » LES

centre de développement pédagogique
pour la formation générale en science et technologie

FABRICATION RANGE

ELEMENT: **PERFORATED PANEL**

SET: **FIND THE SOLUTION!**

RANGE: **1**

SHEET: **1 of 1**

MATERIAL: **Wood agglomerate**

NUMBER: **1**

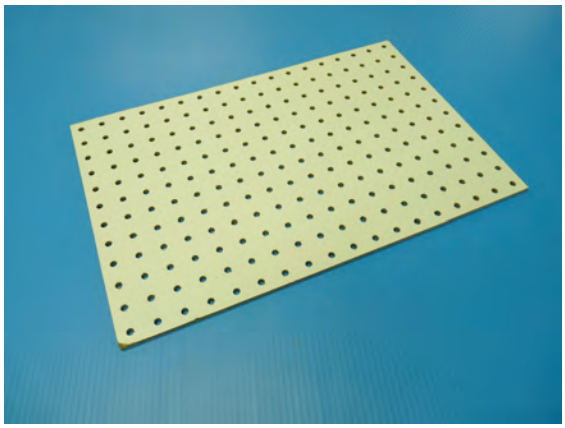

N°	PHASE, SUB-PHASE OR OPERATION	PHOTO OR DRAWING	MACHINE-TOOL, TOOLS
10	**FABRICATION**		
11	In a perforated panel of wood agglomerate, cut out a piece 300 x 450 mm.	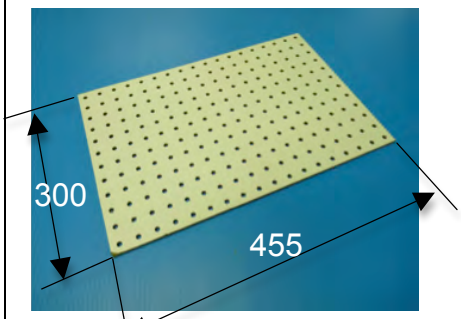	– Pencil – Tape measure – Panel saw or – Band saw or – Table saw
12	The panel must be cut at a distance of 8 mm from the center of the first row of holes. **<u>NOTE</u>:** It is important to respect this measurement. By doing so, it will be easier to assemble the panel to the base	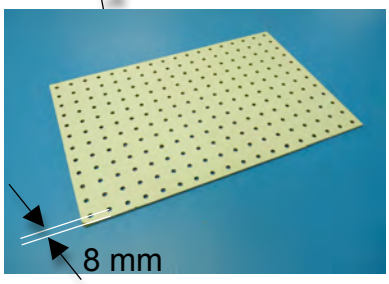 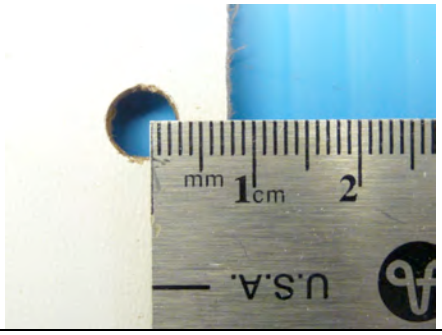	– Ruler

centre de développement pédagogique
pour la formation générale en science et technologie

FABRICATION RANGE

ELEMENT: **BASE**

SET : **FIND THE SOLUTION!**

RANGE: **2**

SET: **1 of 1**

MATERIAL: **MDF**

NUMBER: **1**

N°	PHASE, SUB-PHASE OR OPERATION	PHOTO OR DRAWING	MACHINE-TOOL, TOOLS
10	**FABRICATION**		
11	In a 115mm X 16mm (4.5 in. x 5/8 in.) MDF board, cut a length of 455mm (18 in.)		– Pencil – Ruler – Panel saw – Carpenter's square
12	Using sandpaper, sand and chamfer the ends.		– Sand paper
13	Ensure that the board and the perforated panel are the same length. Adjust as necessary.		

centre de développement pédagogique
pour la formation générale en science et technologie

FABRICATION RANGE

ELEMENT: **SQUARE**

SET: **FIND THE SOLUTION!**

RANGE: **3**

SHEET: **1 of 2**

NUMBER: **2**

MATERIAL : **PINE**

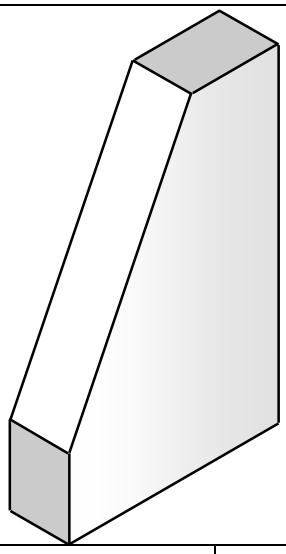

N°	PHASE, SUB-PHASE OR OPERATION	PHOTO OR DRAWING	MACHINE-TOOL, TOOLS
10	**FABRICATION**		
11	In a pine board 16mm thick by 65mm wide, cut two 110 mm pieces.	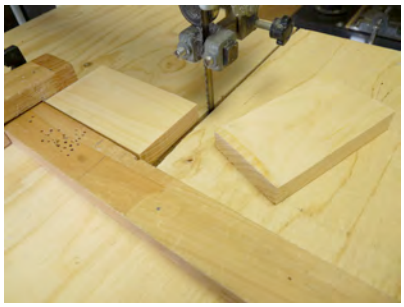	– Pencil – Ruler – Carpenter's square – Band saw or – Panel saw
12	Trace a diagonal line on each part using the drawing to the right.	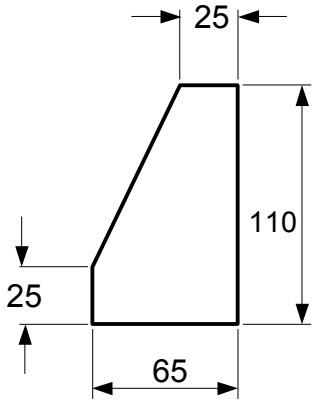 	– Pencil – Ruler – Carpenter's square

FABRICATION RANGE FOR THE SQUARES			SHEET: **2 of 2**
N°	**PHASE, SUB-PHASE OR OPERATION**	**PHOTO OR DRAWING**	**MACHINE-TOOL, TOOLS**
13	Using a panel saw or the band saw, cut out the pieces as shown. File as needed.		– Band saw or – Panel saw – Semi-smooth file
14	Sand and chamfer the edges.	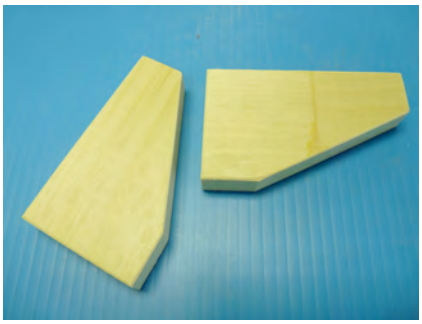	– Sand paper

centre de développement pédagogique
pour la formation générale en science et technologie

ASSEMBLY RANGE

ELEMENT: **PANEL - BASE - SQUARE**

SET: **FIND THE SOLUTION!**

RANGE: **5**

SHEET: **1 of 5**

MATERIALS: **Various**

NUMBER: **1**

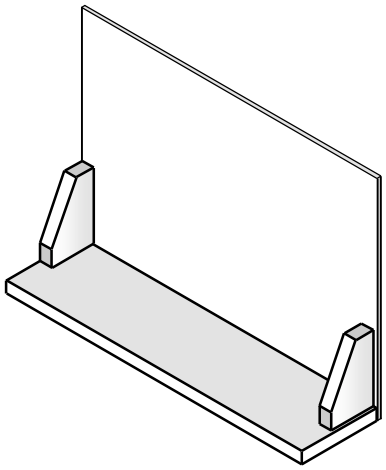

N°	PHASE, SUB-PHASE OR OPERATION	PHOTO OR DRAWING	MACHINE-TOOL, TOOLS
10	**PANEL - BASE - SQUARE**		
11	Align the panel and the base. On the base, trace a line perpendicular to the panel that prolongs the axis of the holes. Trace the center of the holes as shown. This will allow you to affix the squares. Repeat this operation for the other extremity.	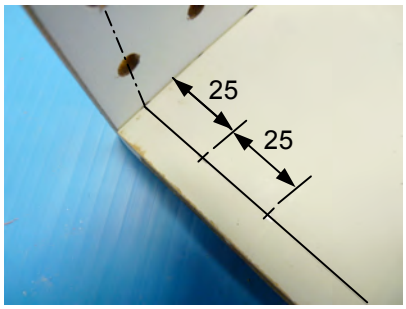	– Pencil – Carpenter's square – Ruler
12	Punch the placement of the holes at each extremity of the base.	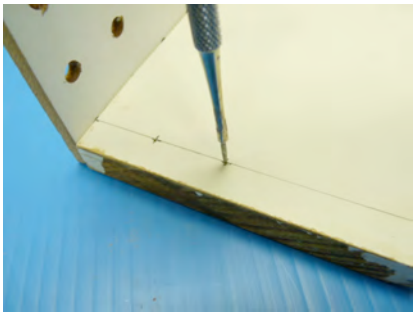	– Punch – Hammer
13	Drill the two holes with a 3mm diameter at each extremity of the base.	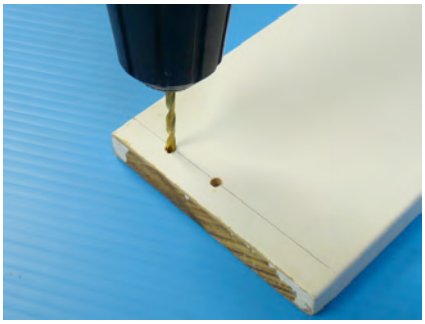	– Drill – 3 mm Ø bit

ASSEMBLY RANGE: PANEL - BASE - SQUARE			SHEET: **2 of 5**
N°	**PHASE, SUB-PHASE OR OPERATION**	**PHOTO OR DRAWING**	**MACHINE-TOOL, TOOLS**
14	Countersink the four holes under the base.	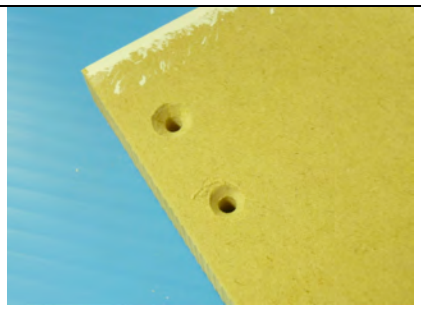	– Drill – Countersink
15	Center the square in relation to the line drawn on the board, as well as on the axis of the holes in the panel.	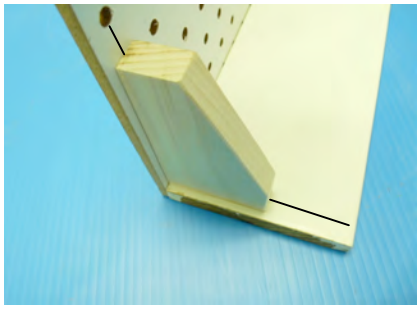	– Pencil – Ruler
16	Hold the square using a clamp.	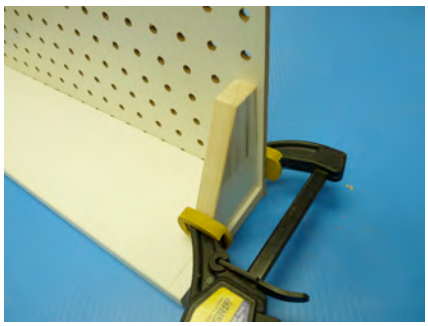	– Clamp
17	Punch the square through the holes drilled in the base.	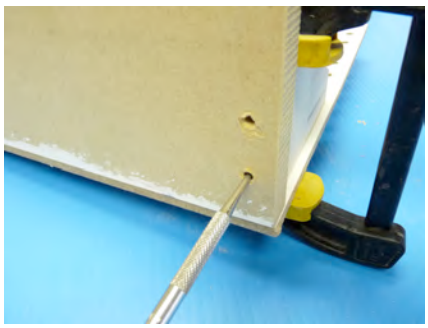	– Punch – Hammer

ASSEMBLY RANGE: PANEL - BASE - SQUARE			SHEET: **3 of 5**
N°	**PHASE, SUB-PHASE OR OPERATION**	**PHOTO OR DRAWING**	**MACHINE-TOOL, TOOLS**
18	Drill two pilot holes 3/32 in. in diameter in the squares.	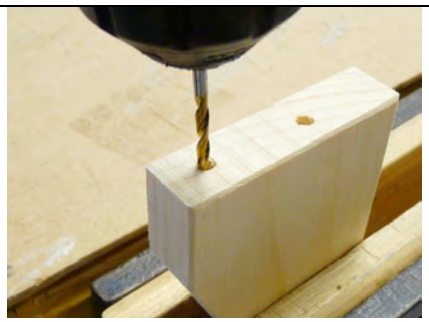	– Drill – 3/32 in. bit – Bench vise
19	Using four N° 6 - 1 ½ in. round head screws and washers, affix each square to the perforated panel and to the base.	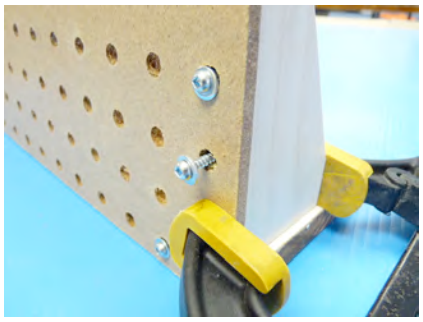	– Screwdriver – clamp – N°6 - 1 1/2 in. screw – Washers
20	**PANEL – BASE**		
21	Starting at the second hole of the perforated panel, punch 5 holes, spreading them out over the length of the panel.	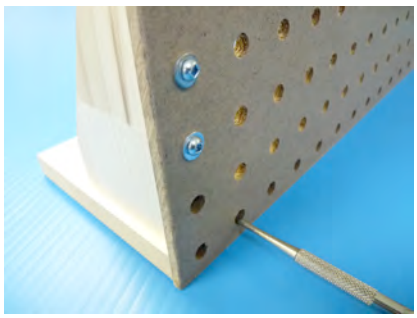	– Punch – Hammer
22	Pilot drill these five holes with a 3/32 in. diameter through the perforated panel.	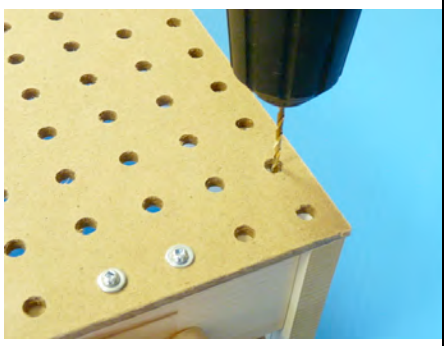	– Perceuse – Foret ∅ 3/32 po.

ASSEMBLY RANGE: PANEL - BASE - SQUARE			SHEET: **4 of 5**
N°	**PHASE, SUB-PHASE OR OPERATION**	**PHOTO OR DRAWING**	**MACHINE-TOOL, TOOLS**
23	Visser le panneau perforé à la base à l'aide de cinq vis à tête ronde N° 6 - 1 ½ po.	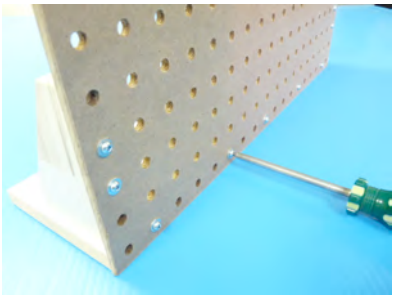 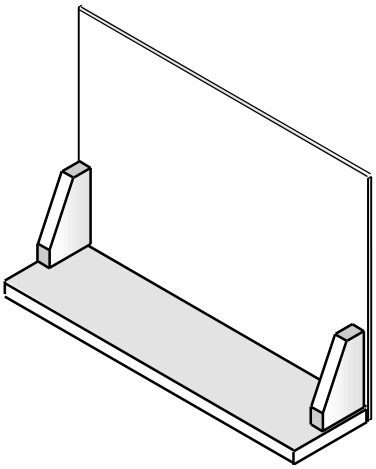	– Tournevis – Vis N° 6 - 1 ½ po.

ASSEMBLY RANGE: PANEL - BASE - SQUARE			SHEET: **5 of 5**
N°	**PHASE, SUB-PHASE OR OPERATION**	**PHOTO OR DRAWING**	**MACHINE-TOOL, TOOLS**
30	**INSTALLATION DES BORNES**		
31	À l'aide de 4 boulons N° 6 - 32 1 po., monter les bornes sur le panneau tel que montré. **<u>REMARQUE</u>** : Voir la procédure ci-jointe pour la fabrication et l'installation de l'interrupteur.		– Boulons N° 6 - 32 1 po. – Rondelle – Écrous
32	Installer l'interrupteur tel que montré.	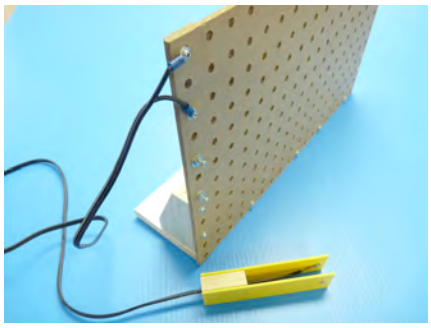	
33	Les connections à la source se feront à l'aide pe pinces alligator.	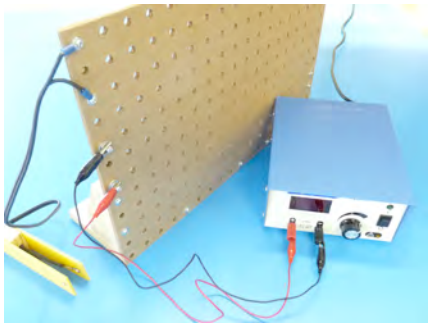	

Push button switch
normally on

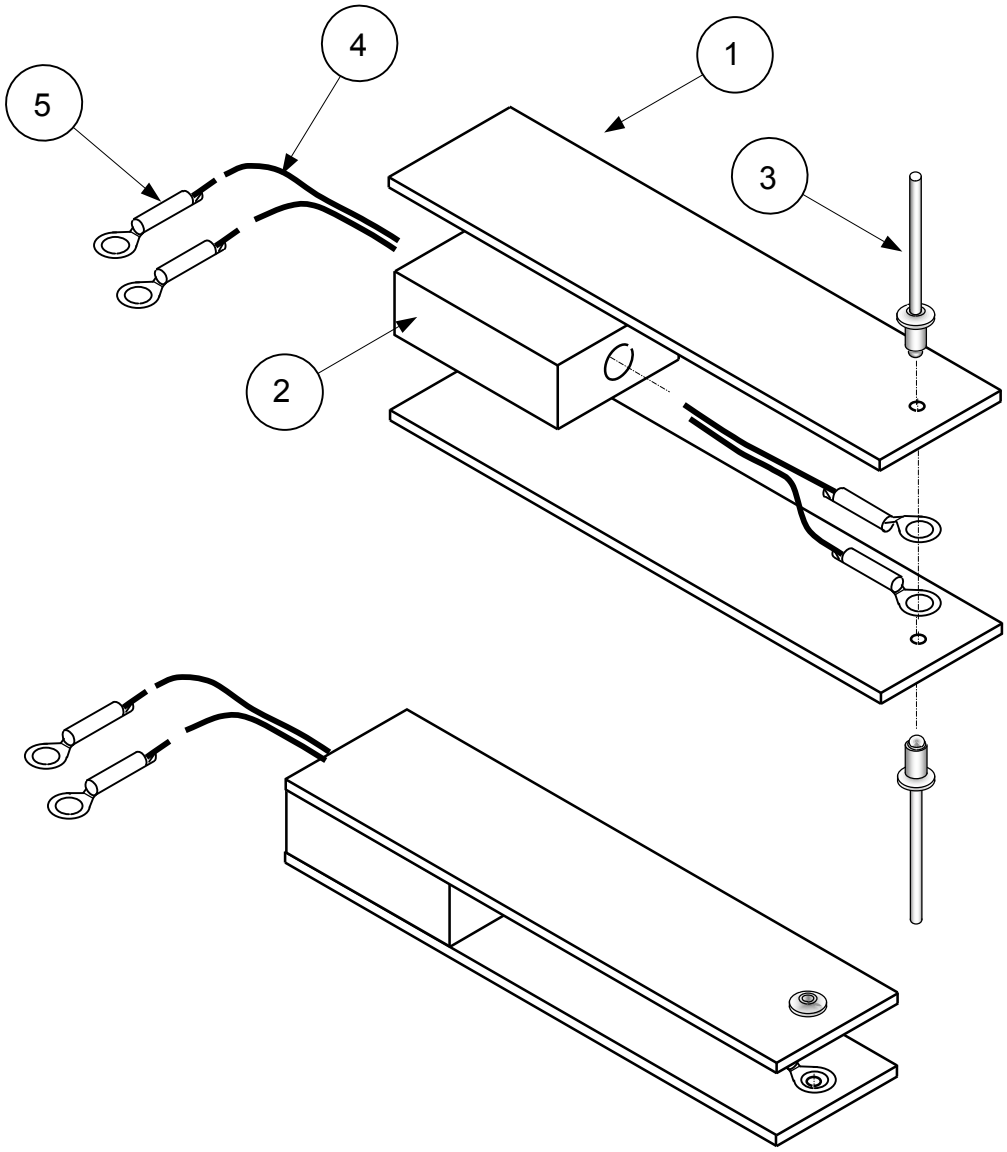

Ref.	No.	Designation	Materials
1	2	Flexible plate	Polystyrene 150 x 40 x 3 mm
2	1	Separator	Pine board 1 ½ x 5/8 in.
3	2	Contact	Pop rivet Ø 3 x 12
4		Conductor	1.5 metres lamp wire
5	4	Connector	Ø allowing linkage to a n° 6 screw

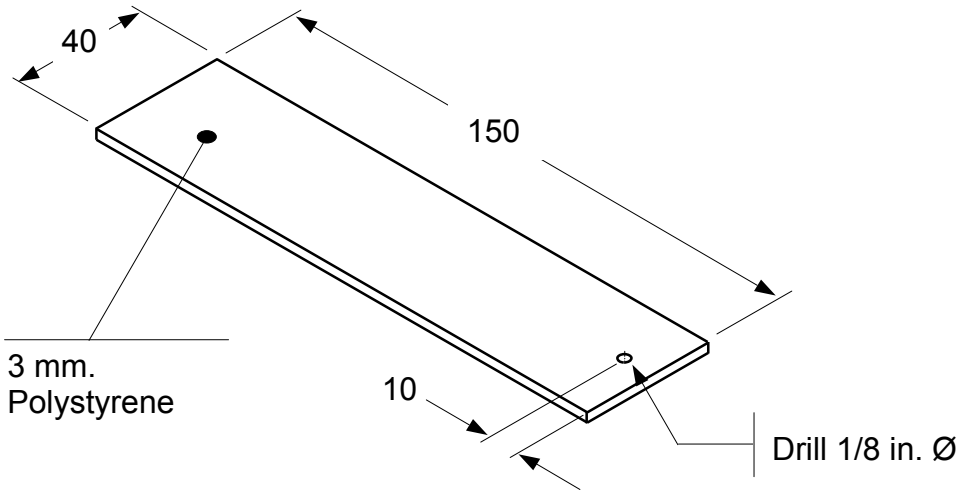
40
150
3 mm.
Polystyrene
10
Drill 1/8 in. Ø

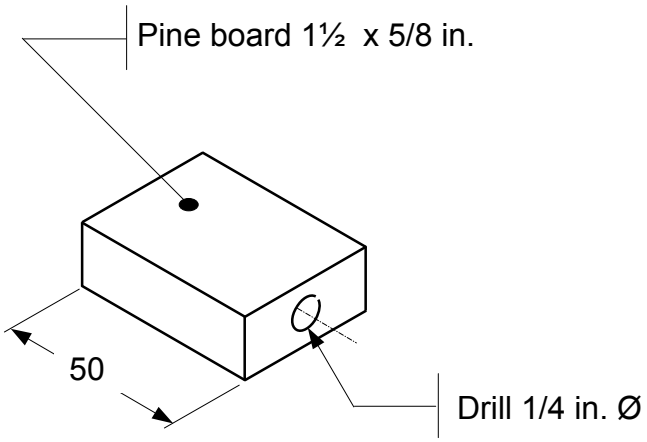
Pine board 1½ x 5/8 in.
50
Drill 1/4 in. Ø

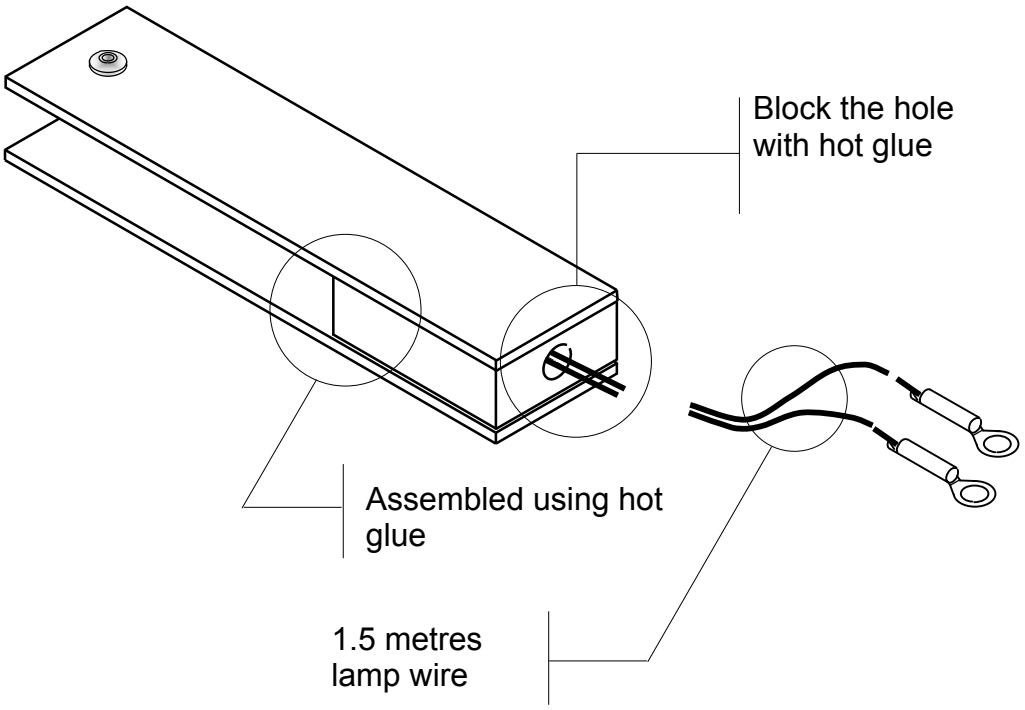
Block the hole
with hot glue
Assembled using hot
glue
1.5 metres
lamp wire

Panel power supply

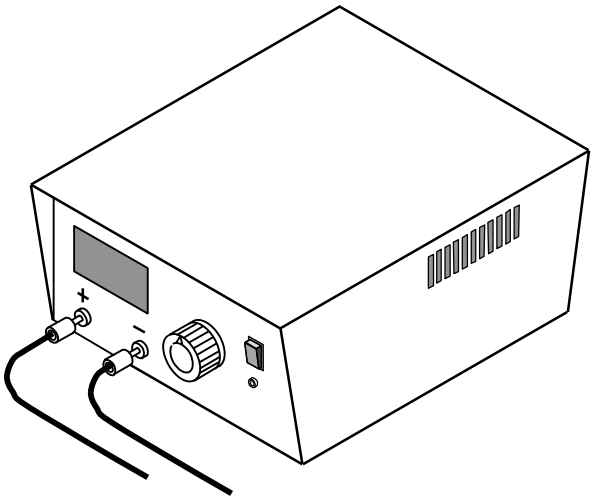

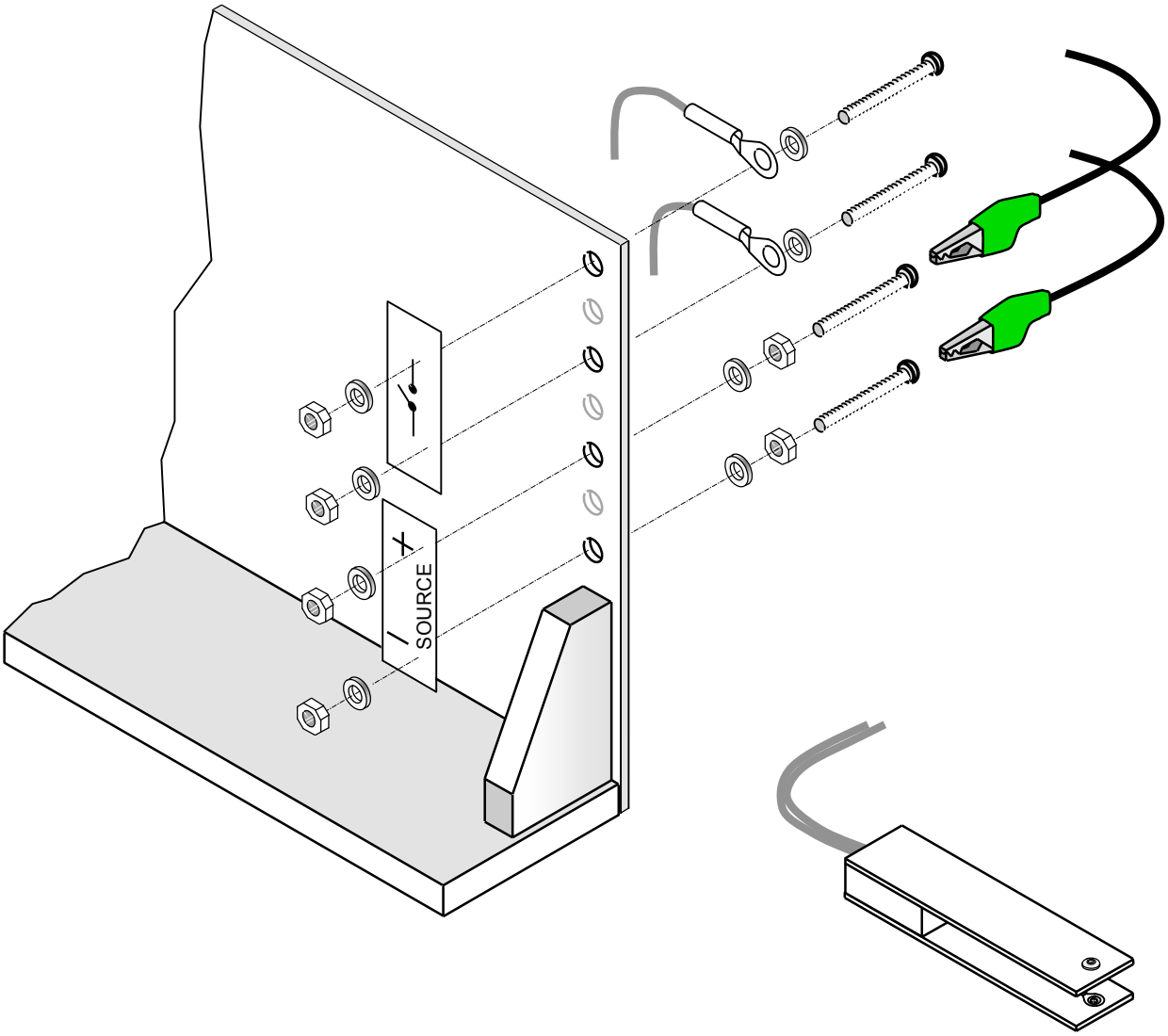

Labels to be glued on the panels